ASSEMBLY INSTRUCTION

ITEM DESCRIPTION:

ITEM NO: FDS20 NAME: Forgey Dining Table

MATERIAL TYPE: Oak Wood FINISH: Ebony

ITEM NET WEIGHT: 318.85 LBS

Figure 1

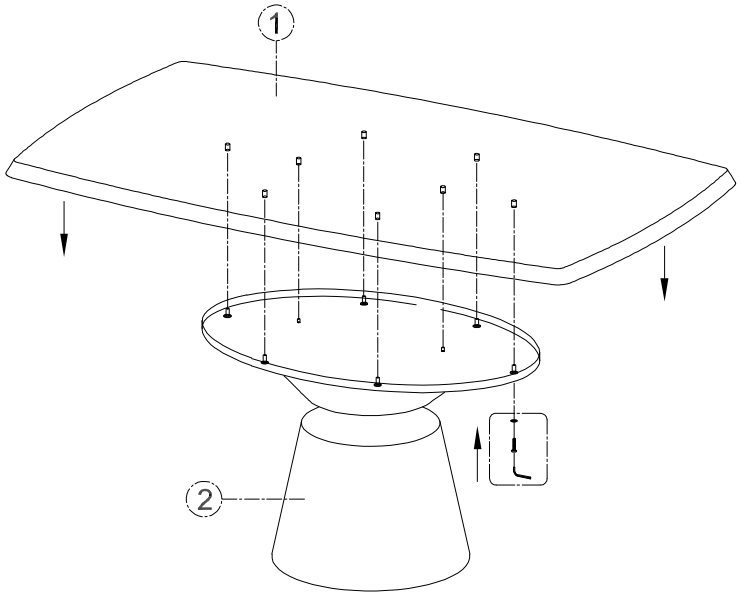

Figure 2

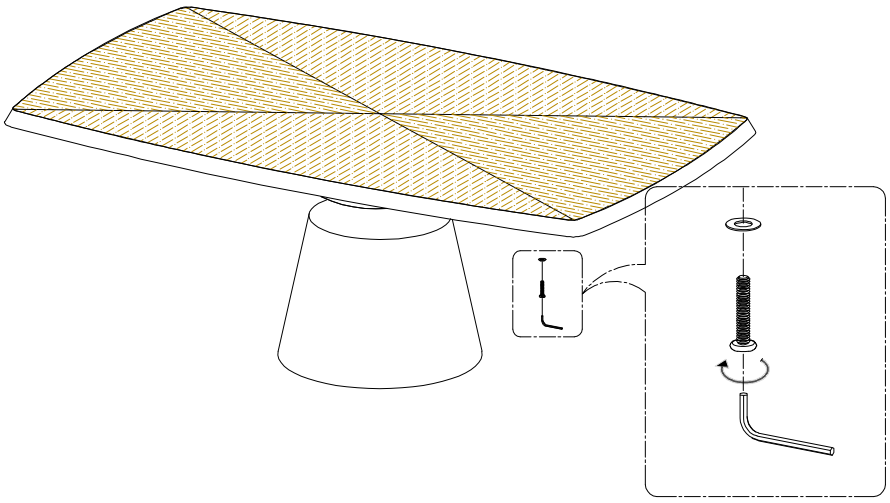

- Do not throw away packaging materials until assembly is complete.
- Assemble this item on a soft surface to protect finish.
- For safely, proper assembly requires two people.

TO ASSEMBLE:

1. Place the base on the floor. Lift the table top then place it onto the top, align as figure 1. Using hand to attach and turn all the bolts together with washers into the thread holes. At least two people are required to lift the heavy part in this case.

2. After tightening all the bolts by hands smoothly, Using allen key to tighten all the bolts tighly to connect the base and the tabletop, as figure 2. Check the stability of the table then lift to move it to final position.

PARTS INCLUDED:

Parts	Qty
Top	1
Base	1
Hexagon bolts	6
Washer	6
Allen key	1

CARE INSTRUCTIONS:

Hardware may loosen over time. Periodically check that all connections are tight. Wipe with a soft, dry cloth. To protect finish, avoid the use of chemicals and household cleaners.